NOTICE—WHEN GOVERNMENT DRAWINGS, SPECIFICATIONS, OR OTHER DATA ARE USED FOR ANY PURPOSE OTHER THAN IN CONNECTION WITH A DEFINITELY RELATED GOVERNMENT PROCUREMENT OPERATION, THE UNITED STATES GOVERNMENT THEREBY INCURS NO RESPONSIBILITY NOR ANY OBLIGATION WHATSOEVER; AND THE FACT THAT THE GOVERNMENT MAY HAVE FORMULATED, FURNISHED, OR IN ANY WAY SUPPLIED THE SAID DRAWINGS, SPECIFICATIONS, OR OTHER DATA, IS NOT TO BE REGARDED BY IMPLICATION OR OTHERWISE AS IN ANY MANNER LICENSING THE HOLDER OR ANY OTHER PERSON OR CORPORATION, OR CONVEYING ANY RIGHTS OR PERMISSION TO MANUFACTURE, USE, OR SELL ANY PATENTED INVENTION THAT MAY IN ANY WAY BE RELATED THERETO.

SYM	REVISIONS	DATE	APPROVED
A	REDRAWN, PUT ON CAD.	11-12-80	DJH GMS
B	1/4 HEX HOLE WAS SLOT .06/.09 WIDE X 1/16 DEEP (SALES REQT.)	6/15/84	GMS

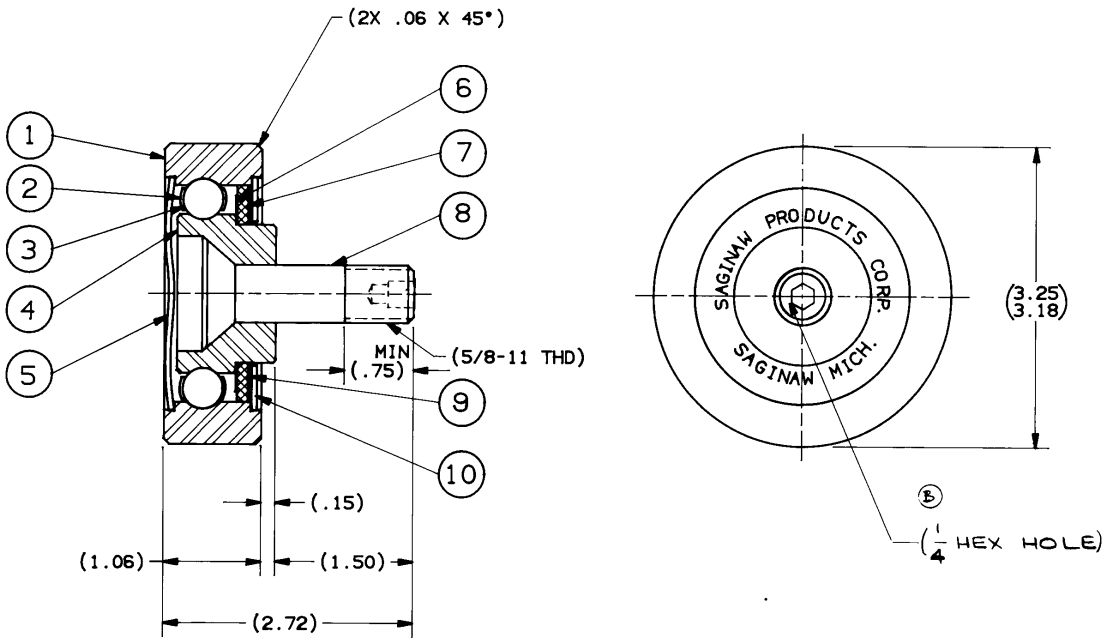

QTY REQD	ITEM	DWG SIZE	PART OR IDENTIFYING NO.	NOMENCLATURE OR DESCRIPTION	CODE IDENT	MATERIAL OR NOTE	SPECIFICATION
1	10	B	01-042875	COVER			
1	9	B	01-042866	SHIM			
1	8	B	14-045084-1	FLAT HEAD BOLT			
1	7	B	01-017040	FELT SEAL			
2	6	B	01-042870	WASHER, PLASTIC			
1	5	B	14-045012-2	WELCH PLUG			
1	4	C	14-045083	CONE			
8	3	-	COML	BALL, STEEL, CARBON		7/16 DIA, GRADE 500	
2	2	C	14-045007	BALL SEPARATOR			
1	1	C	14-045082	TROLLEY WHEEL SHELL			

NOTE:

1. APPLY GREASE TO BALLS, USE MOLUB ALLOY #2 ALL PURPOSE EXTREME PRESSURE GREASE.

NEXT ASS'Y	USED ON	QTY

UNLESS OTHERWISE SPECIFIED DIMENSIONS ARE IN INCHES

TOLERANCES

FRACTION	DECIMALS	ANGLES
± 1/16	.X ± .06	± 1°
	.XX ± .03	
	.XXX ± .010	

MATERIAL

FINISH

DRAWN BY DJH

CHECKED BY G.M.S

ENGR APPROVAL

CHIEF ENGR APPROVAL

ORG DATE DRAWN 3-9-82

SAGINAW PRODUCTS CORPORATION
68 WILLIAMSON ST., SAGINAW, MICHIGAN 48601 517-753-1411

(A)

FLAT TREAD
TROLLEY WHEELS
(RETAINER, 7/16 BALLS)

CODE IDENT. NO. 52793

DWG SIZE C 14-045081

SCALE 1/1 WT. 1# 15 OZ SHEET

14-045081

BRUNING 44 131 52553

900 # @ 50 R.R.M

C-45161

C-14-045060, C-42861

CHARTED